University of Stuttgart
Institute of Robust Power Semiconductor Systems

# IV characteristics of SiC power MOSFETs in the HV saturation region

**5th Sino MOS-AK Workshop Xi'an**

Cristino Salcines

12.08.2021

cristinosalcines@gmail.com

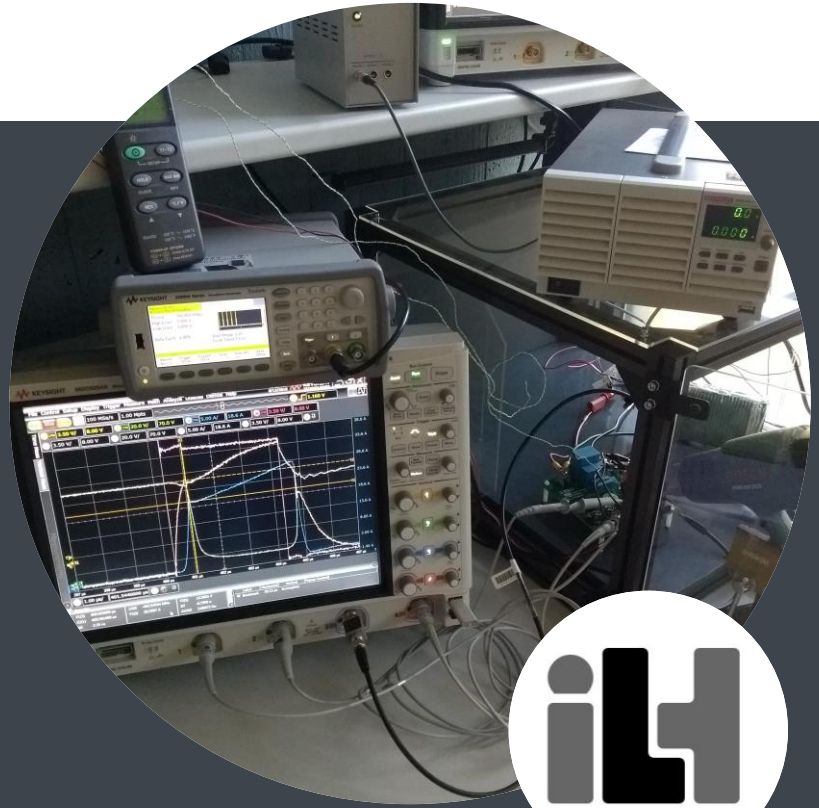

# Agenda

- Motivation
- Proposed measurement technique
- Measurement results
- Conclusions

# Agenda

- Motivation
- Proposed measurement technique
- Measurement results
- Conclusions

# Silicon Carbide

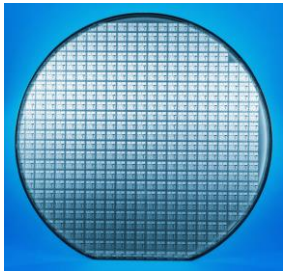

**Semiconductor**

- Higher energy bandgap

**Power Device**

- Lower specific on-resistance (mΩ*mm²)
- Smaller chip area
- Faster switching speed → Lower switching losses

**Application**

- Higher switching frequencies
- Higher power density

… than Silicon

Source of photos:
https://www.electronicsweekly.com/uncategorised/march-wafer-sales-soar-2020-04/
Reimers et al. IEEE Transactions on vehicular technology, 2019

# Dynamic behavior of a power MOSFET

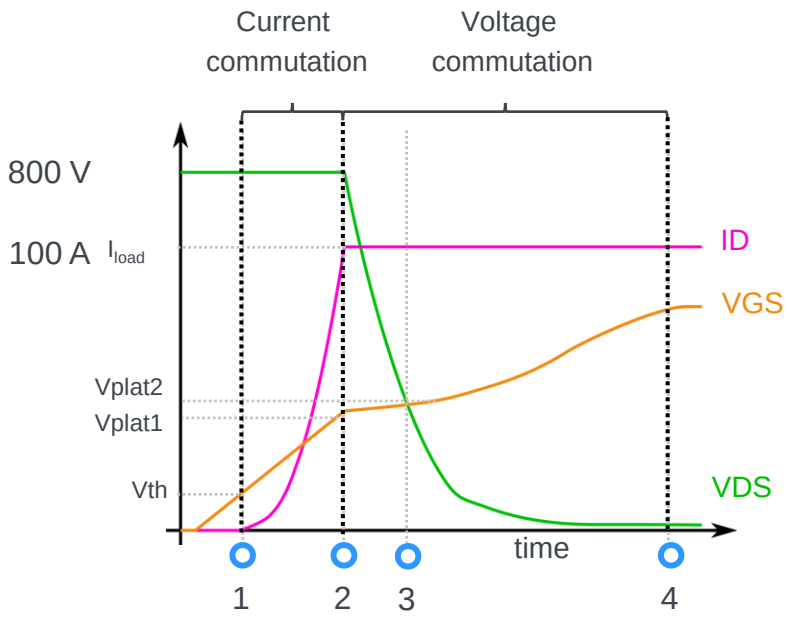


Double Pulse Test (DPT)

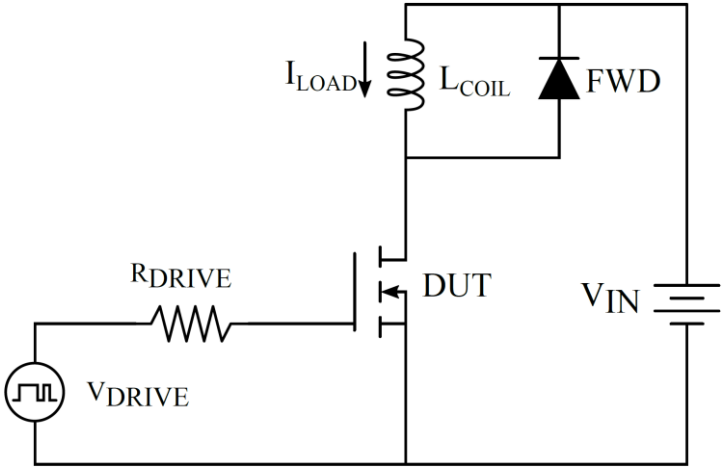


Static IV characteristics (i.e. Gm) in the HV saturation region influences the dynamic behavior of the power MOSFET

# Limitations of characterization techniques

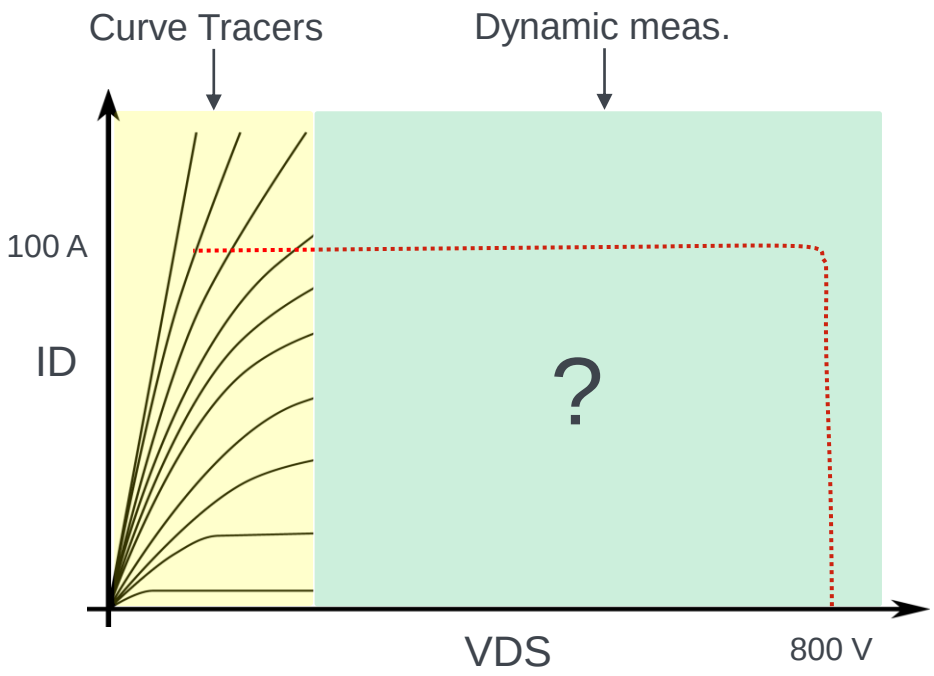


Switching trajectory

Conventional measurement solutions

Proposed in this work

Extract
static IV-characteristic
from dynamic measurements

# Agenda

- Motivation
- Proposed measurement technique
- Measurement results
- Conclusions

# Extended IV characteristics of power MOSFETs

Important to consider:

1. Time window
2. Intrinsic voltages

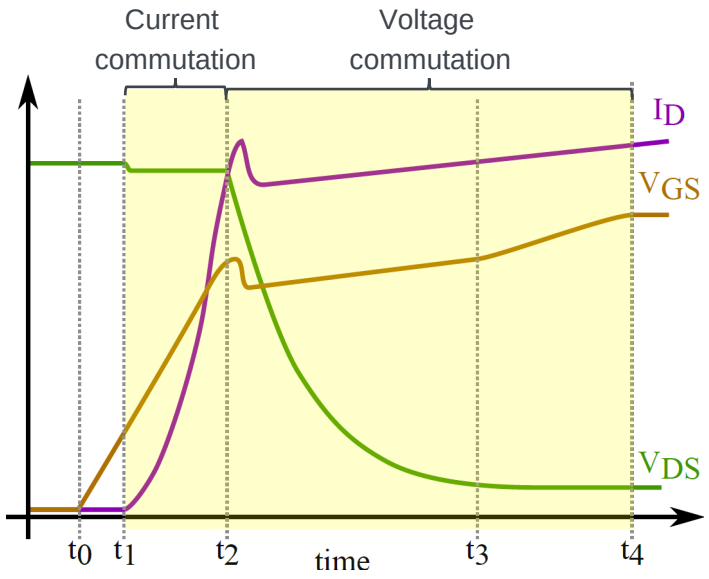


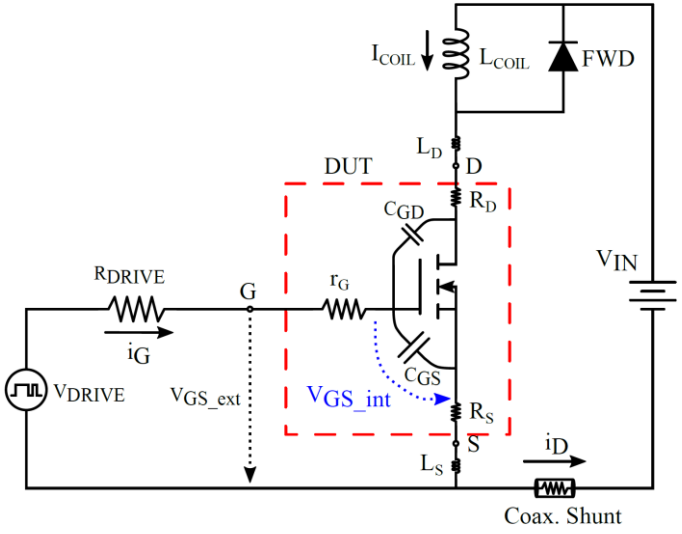

# Extended IV characteristics of power MOSFETs
## Time interval: Current commutation

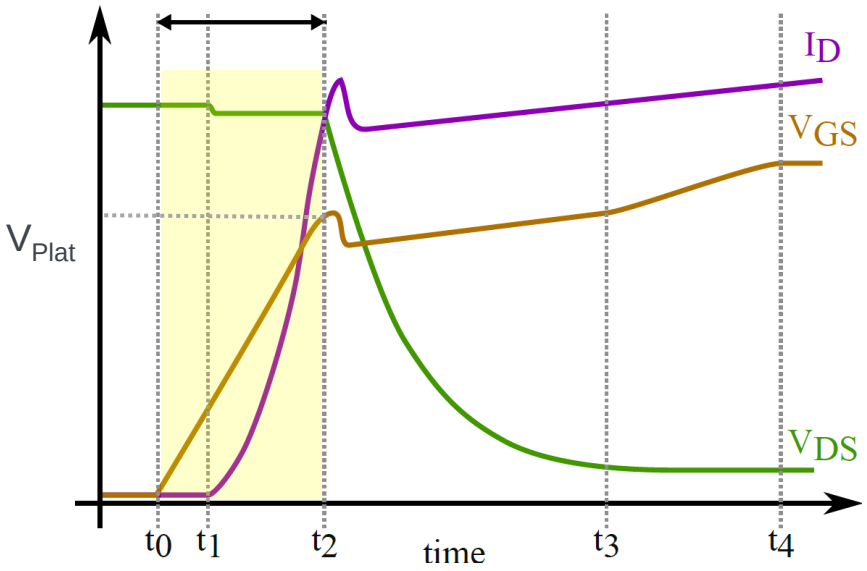


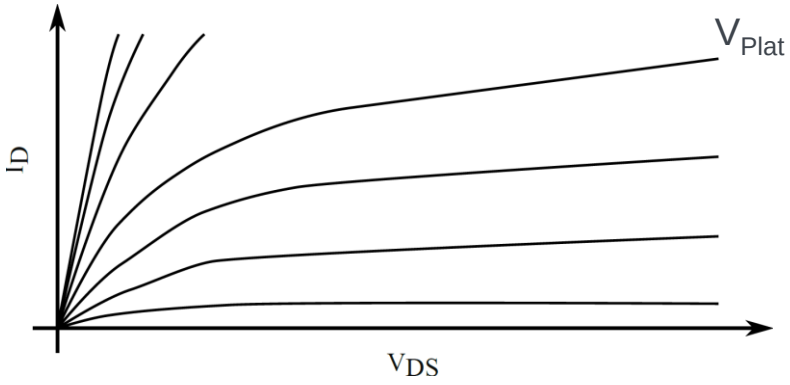

# Extended IV characteristics of power MOSFETs
## Time interval: Current commutation

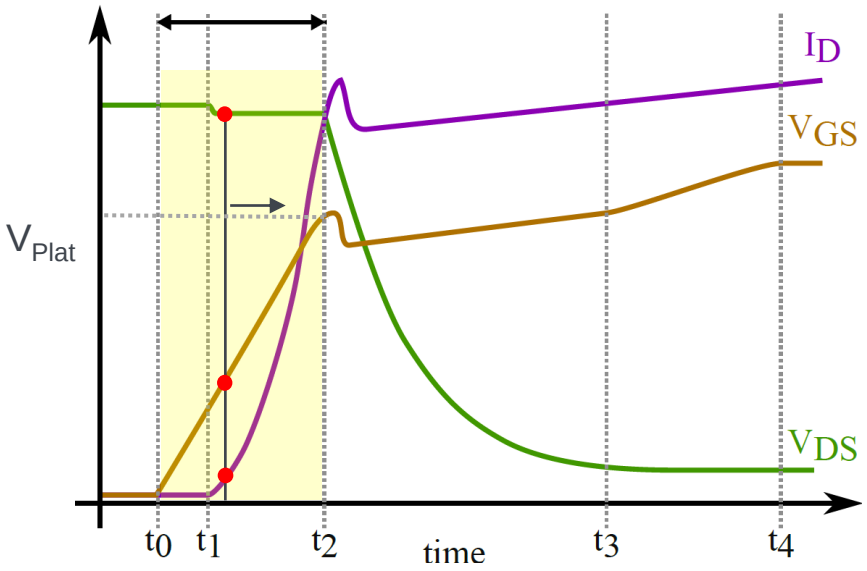


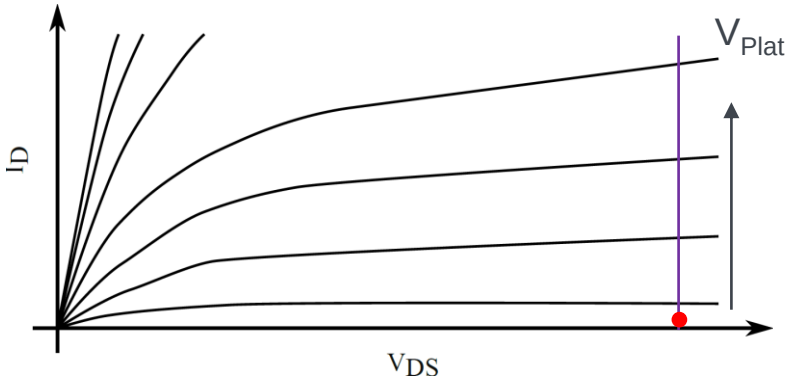

# Extended IV characteristics of power MOSFETs
## Time interval: Current commutation

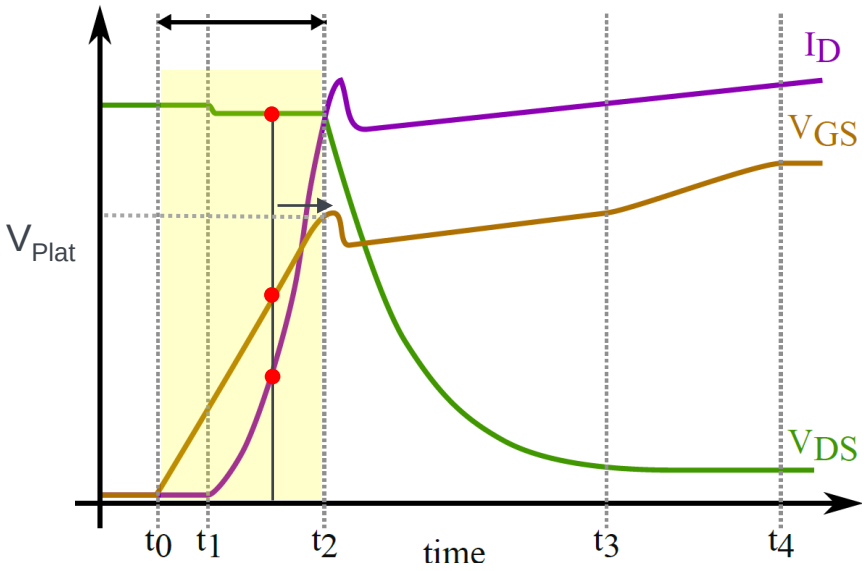


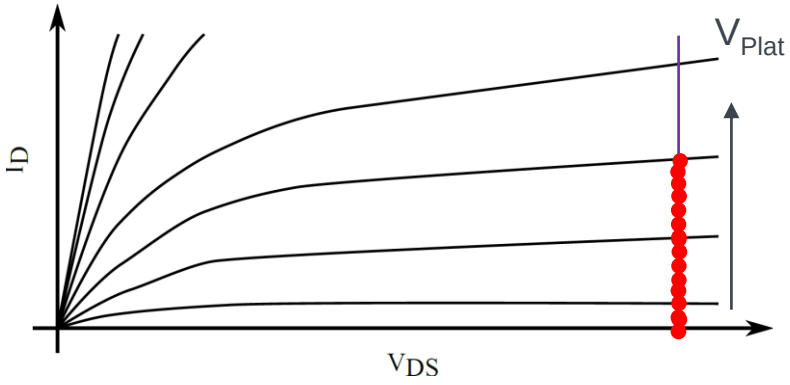

# Extended IV characteristics of power MOSFETs
## Time interval: Current commutation

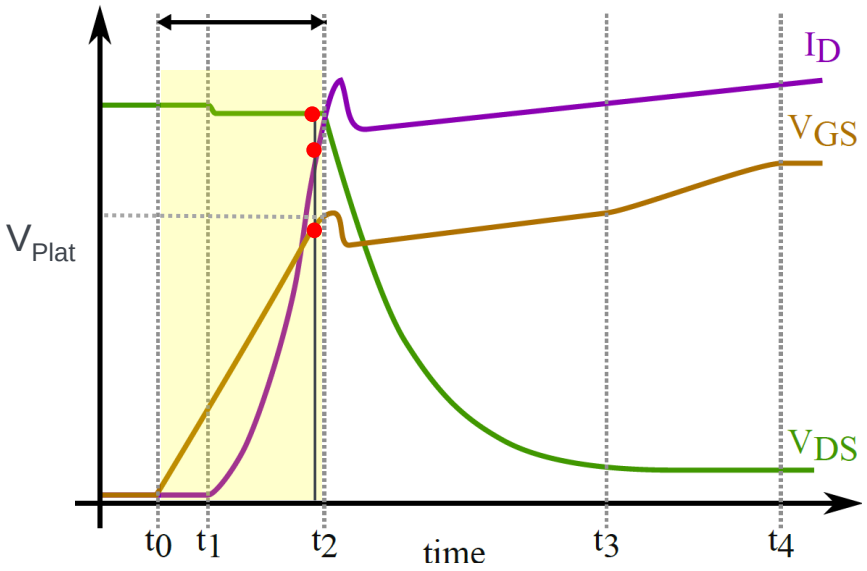


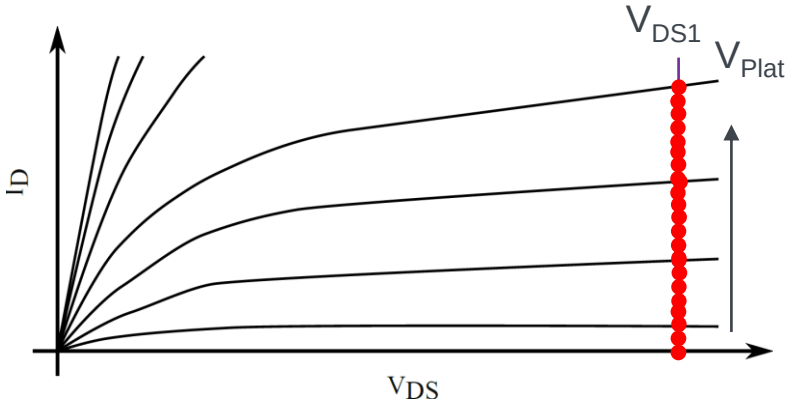

# Extended IV characteristics of power MOSFETs
## Time interval: Current commutation

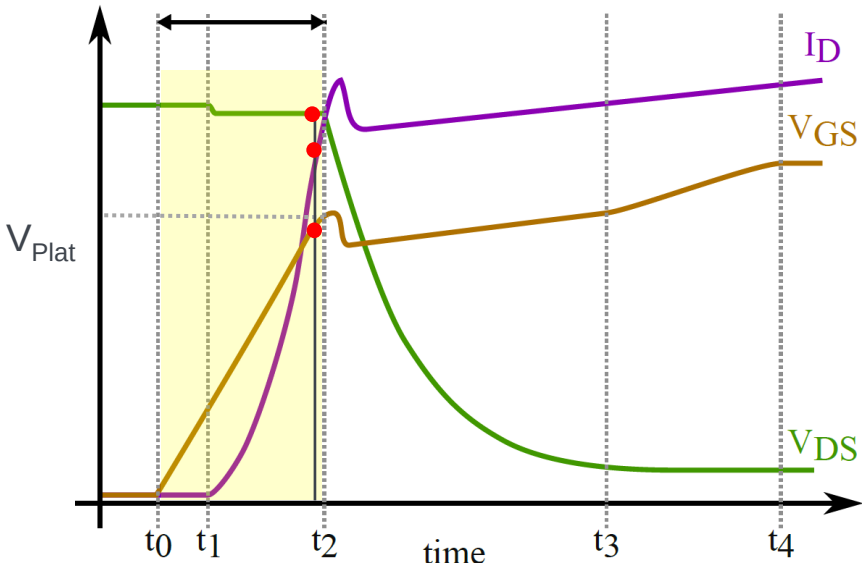


Measuring at different $V_{DS}$ …

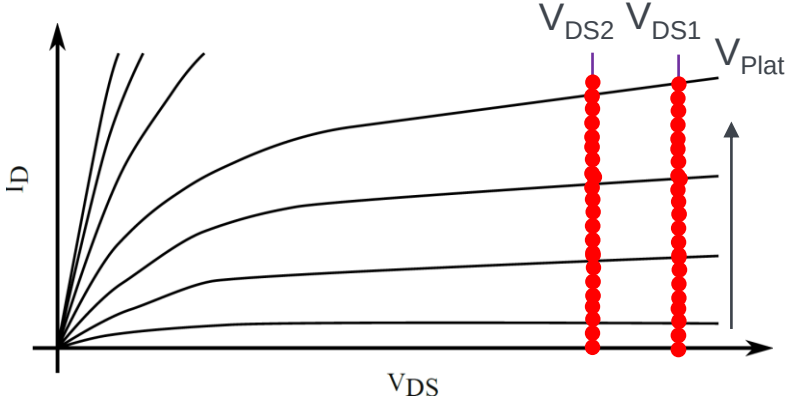

# Extended IV characteristics of power MOSFETs
## Time interval: Current commutation

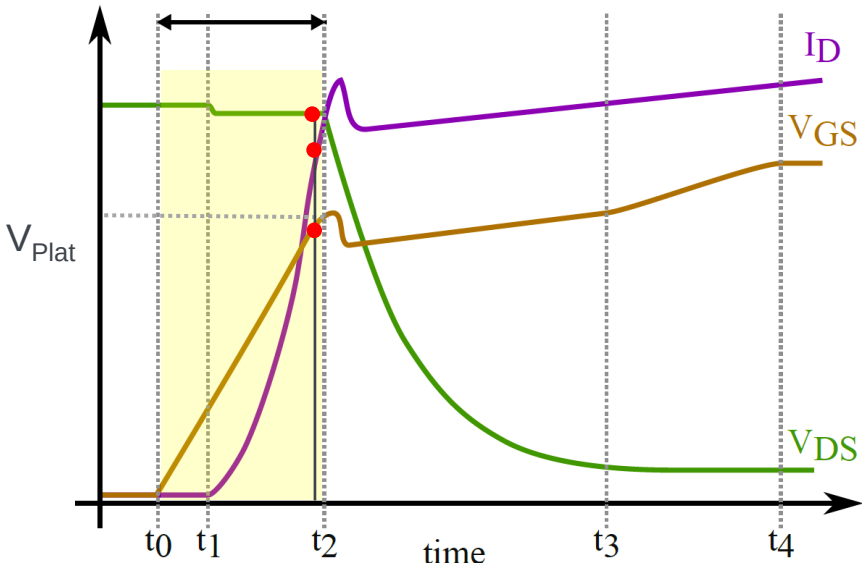


Measuring at different $V_{DS}$ …

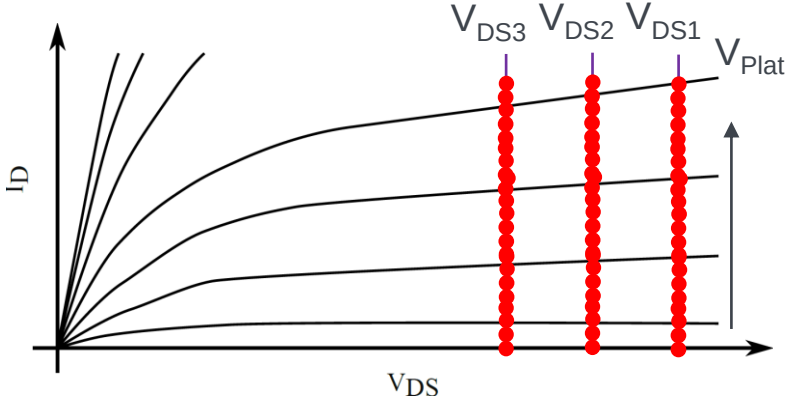

# Extended IV characteristics of power MOSFETs
## Time interval: Current commutation

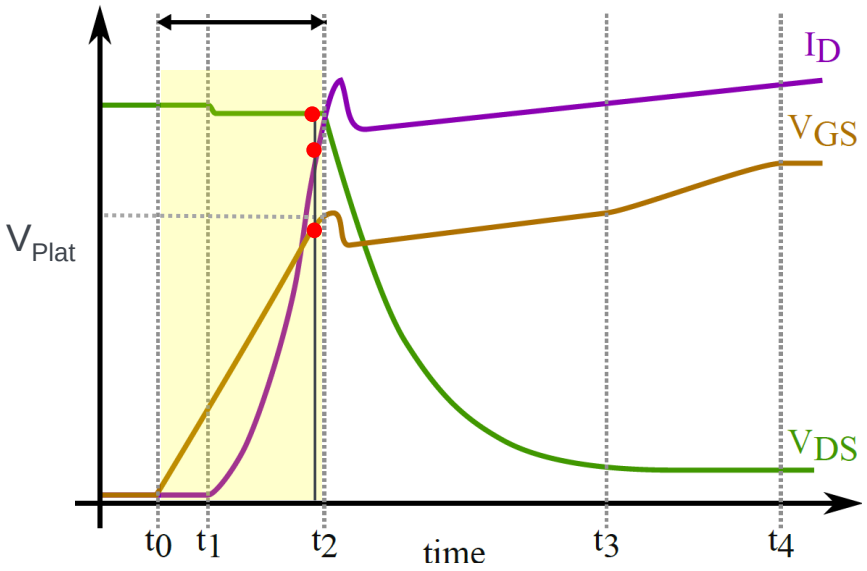


Measuring at different $V_{DS}$ …

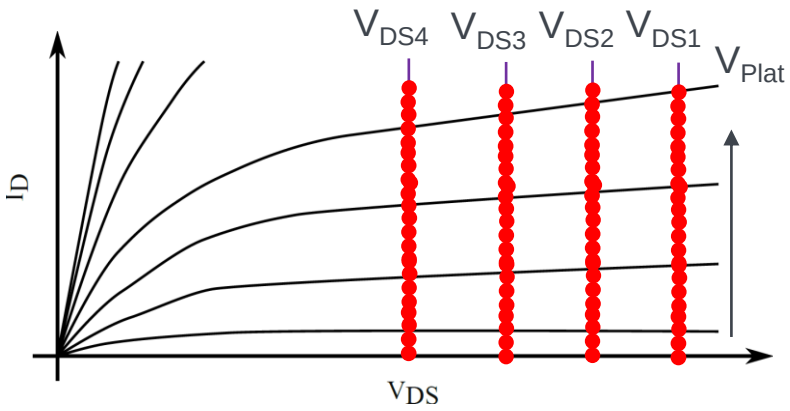

# Extended IV characteristics of power MOSFETs

Important to consider:

1. Time window ✓
2. Intrinsic voltages

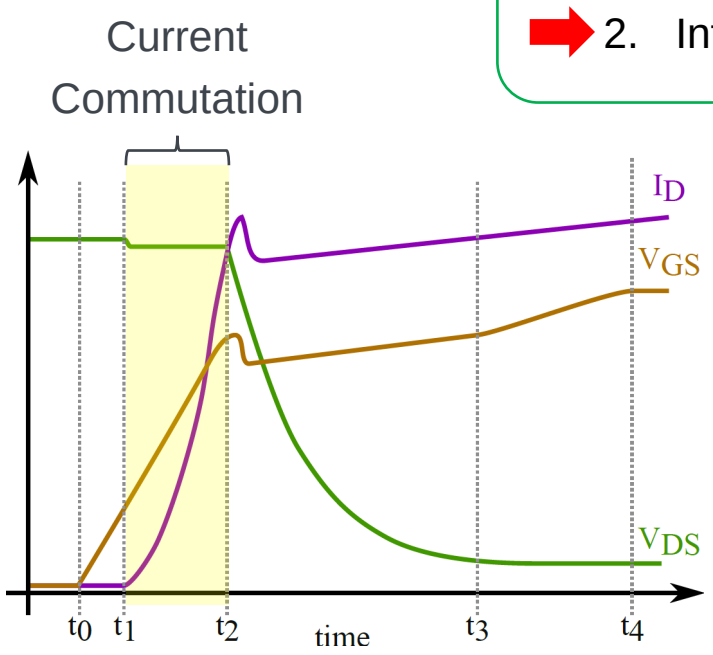


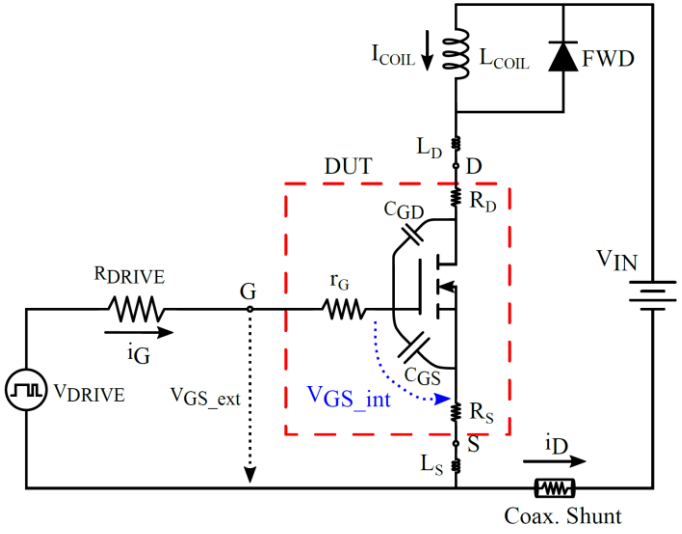

# Extended IV characteristics of power MOSFETs

## Internal voltage calculation $V_{GS\_int}$

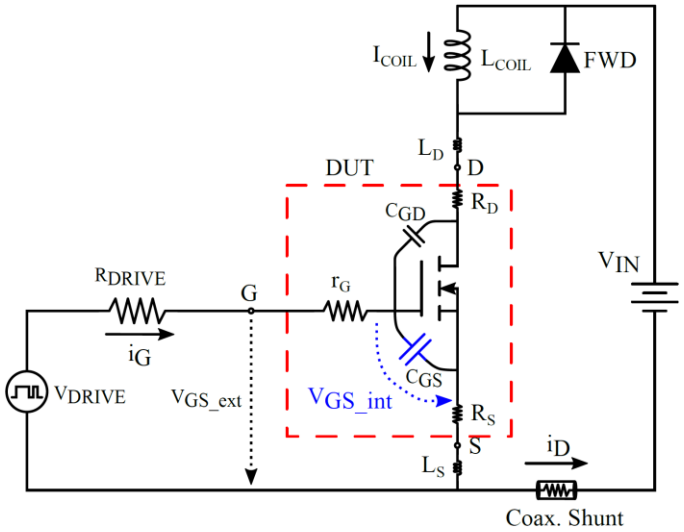


$$I_C = C \cdot \frac{dV_C}{dt}$$

$$\downarrow$$

$$v_{\mathrm{GS\_int}} = V_{\mathrm{GS\_ext}}(t_0) + \int \frac{i_{\mathrm{G}}}{c_{\mathrm{GS}}} \cdot dt$$

not affected by surrounding parasitics ☺

Internal $V_{GS}$ can be extracted from gate-source capacitance $C_{GS}$

# Extended IV characteristics of power MOSFETs

Important to consider:
1. Time window ✓
2. Intrinsic voltages ✓

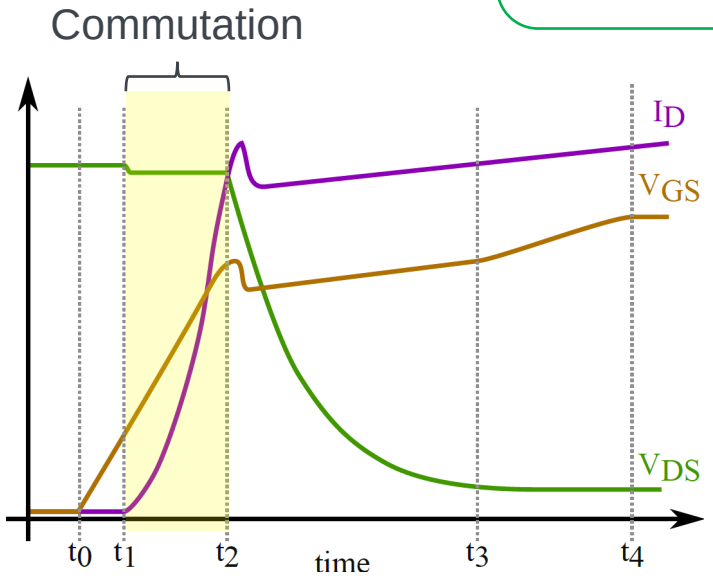


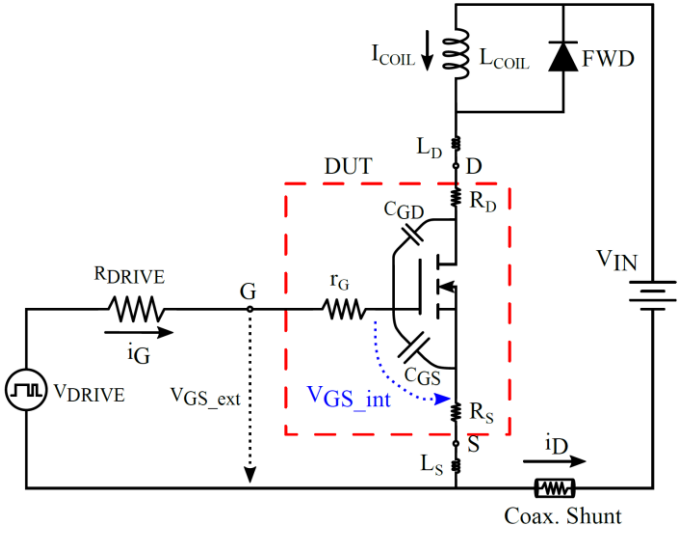

# Agenda

- Motivation
- Proposed measurement technique
- Measurement results
- Conclusions

# Extended IV characteristics of power MOSFETs

DUT: SCT2160KE SiC planar MOSFET 1200V, 22A, 160mΩ

## Output Characteristics

### Linear Scale

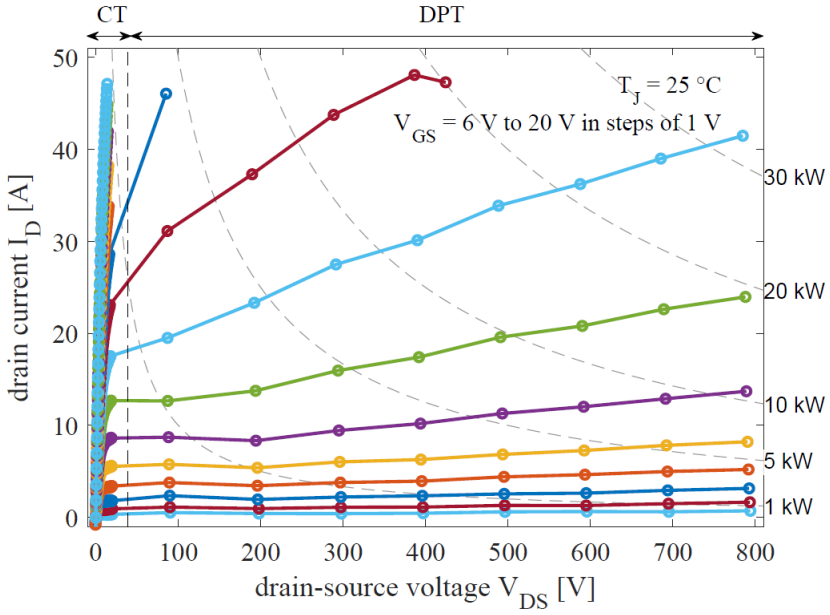


### Logarithmic Scale

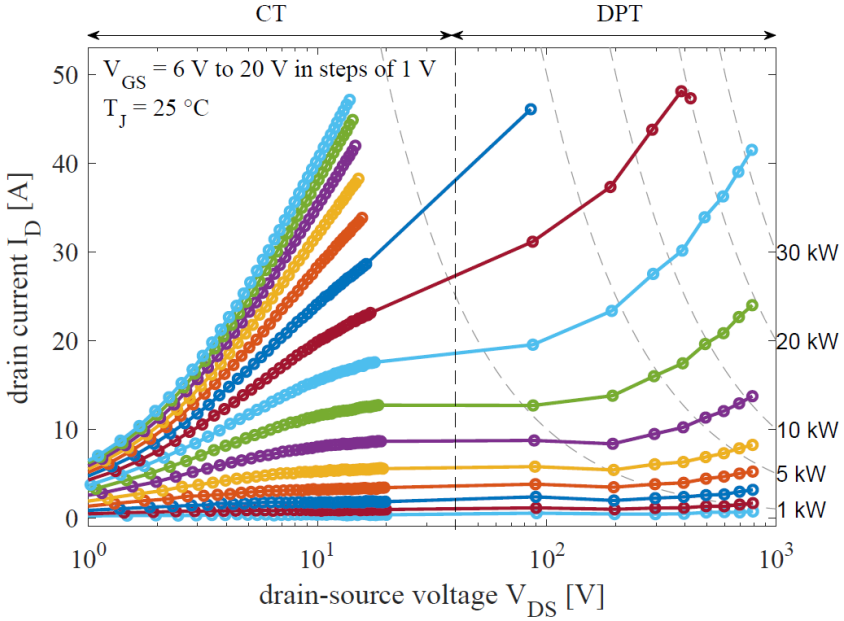

# Extended IV characteristics of power MOSFETs

DUT: SCT2160KE SiC planar MOSFET 1200V, 22A, 160mΩ

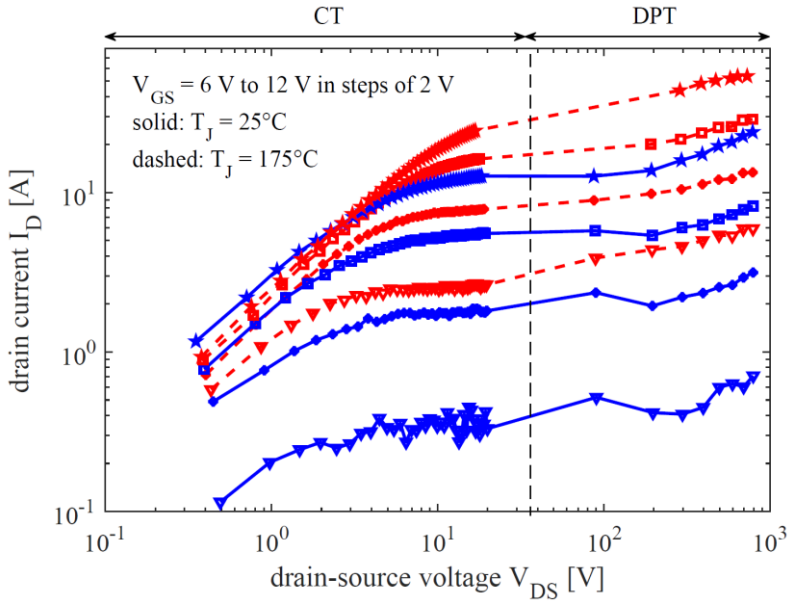


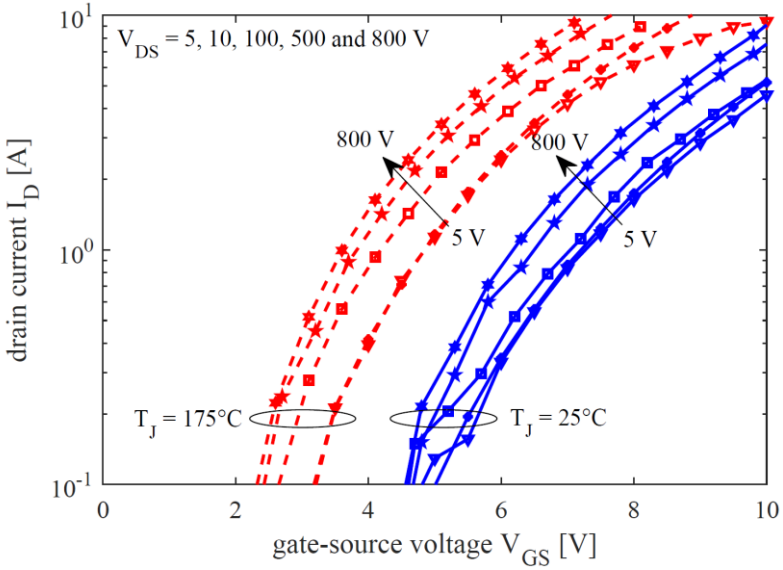


- ✓ Linear and saturation region may have different temperature coefficient
- ✓ Short-channel effects (DIBL) measured
- ✓ Temperature dependence: Density of interface traps (Dit) in SiC/SiO2 interface

# Agenda

- Motivation
- Proposed measurement technique
- Measurement results
- Conclusions

## Motivation

Dynamic behavior
of
SiC power MOSFETs
( ? )

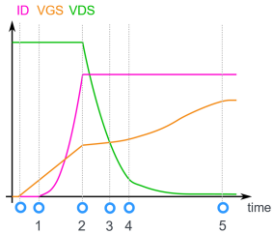


## This work

[1, 2]

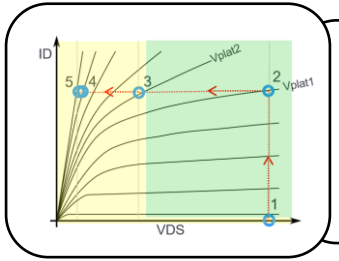


### Extended IV meas. Technique

- High power iso-thermal meas.
- Full operation range IV char.

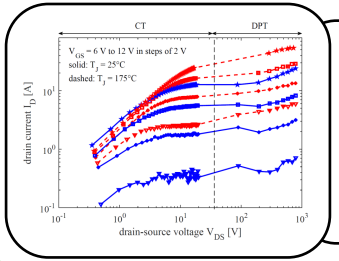


### New insights on dyn. behavior of SiC power MOSFETs

- Linear and saturation region may have different temperature coeff.
- SCE impact VGSth at HV

## Application

[3, 4]

- Accurate power transistor model
- Circuit level optimization


[1] *C. Salcines "Novel characterization techniques for the study of the dynamic behavior of Silicon Carbide power MOSFETs", PhD Dissertation, University of Stuttgart 2021, in press.*

[2] *C. Salcines, A. Kruglov and I. Kallfass, "A Novel Characterization Technique to Extract High Voltage - High Current IV Characteristics of Power MOSFETs from Dynamic Measurements," 2018 IEEE 6th Workshop on Wide Bandgap Power Devices and Applications (WiPDA), Atlanta, GA, 2018*

[3] *C. Salcines, S. Khandelwal and I. Kallfass, "A Compact Model for SiC Power MOSFETs for Large Current and High Voltage Operation. ", preprint*
*https://www.researchgate.net/publication/351278714_A_Compact_Model_for_SiC_Power_MOSFETs_for_Large_Current_and_High_Voltage_Operation*

[4] *S. Khandelwal, C. Salcines and I. Kallfass, "Physics-based model of SiC MOSFETs including high voltage and current regions", 1st Asia/South Pacific MOS-AK Workshop, 2021.*
*https://www.mos-ak.org/asia_pacific_2021/presentations/Khandelwal_MOS-AK_ASP_2021.pdf*

Thank you for your attention