ÉCOLE POLYTECHNIQUE
FÉDÉRALE DE LAUSANNE

Electronics Laboratory
ELab

Hall Effect Sensors Performance Assessment Using Three-Dimensional Physical Simulations

Presentation (selected slides version)
MOS-AK Workshop, Bordeaux, September 21, 2012

Maria-Alexandra PAUN

Assistant - PhD Student
Co-Chair IEEE WIE Switzerland

EPFL Swiss Federal Institute of Technology
STI/IEL/GR-KA Electronics Lab

OUTLINE

- Different Hall Effect sensor configurations have been integrated in CMOS technology and analyzed in terms of their specific parameters.
- The offset, offset drift and sensitivity are quantities extracted to determine the sensors performance.
- To ensure maximum sensitivity, geometrical correction factor maximization was performed for Hall structures with small sensing contacts.
- In order to guide the designer in choosing the Hall cell optimum fabrication process, shape and dimensions, three-dimensional physical simulations have been run.

Hall Effect Sensors

- Classical Greek Cross Hall sensor

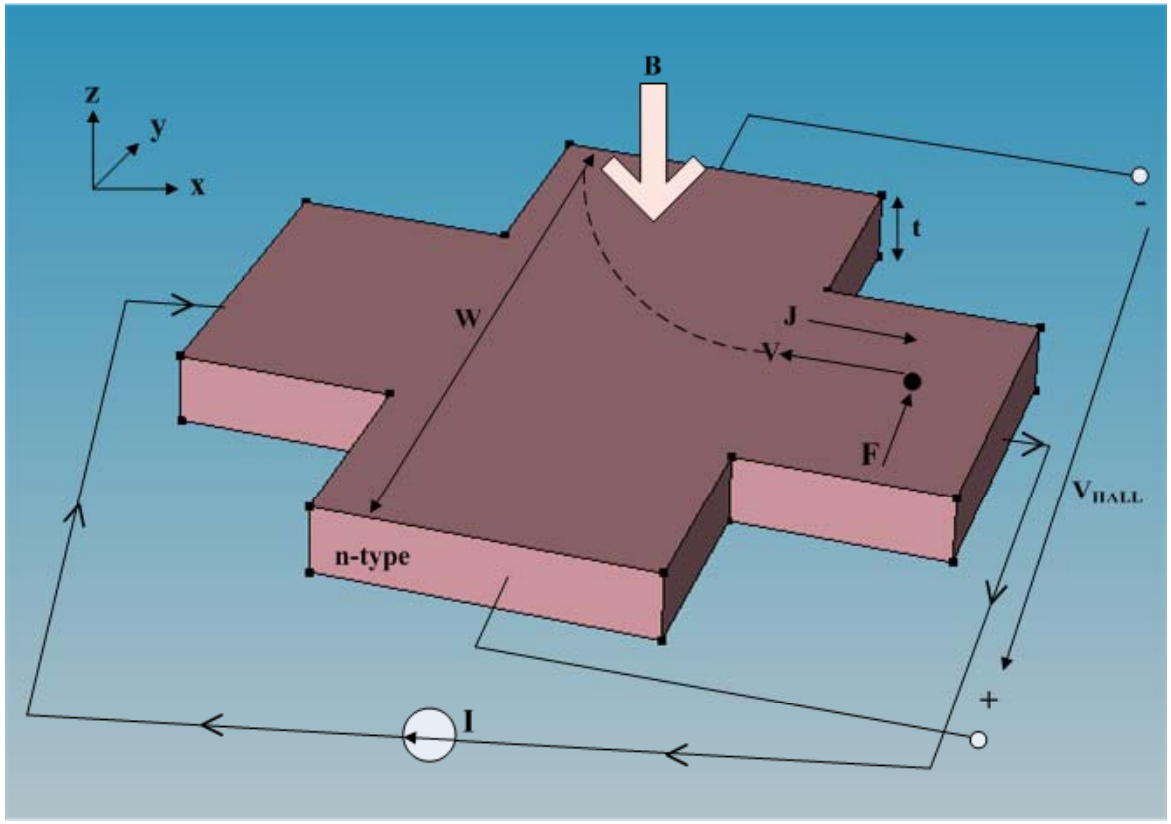

$$V_{HALL} = S_A B \quad (1)$$

$$S_A = \frac{G r_H}{nqt} I_{bias} \quad (2)$$

- low-power applications
- current sensing
- position detection & contactless switching

Qualitative Reasoning for Hall Cells selection

- **Basic:** taken as a reference, but it might suffer from a difference in the piezo-resistance due to the orientation of the axes.

- **45Deg:** the mechanical stress will affect less the piezo-resistance.

- **XL:** errors on the contour are less due to an averaging on a bigger size.

- **Narrow contacts:** prevents shunting of the current and by having small sensing contacts it improves the sensitivity.

Offset Measurements

- An AC automated measurement setup was used to test the Hall structures [1].

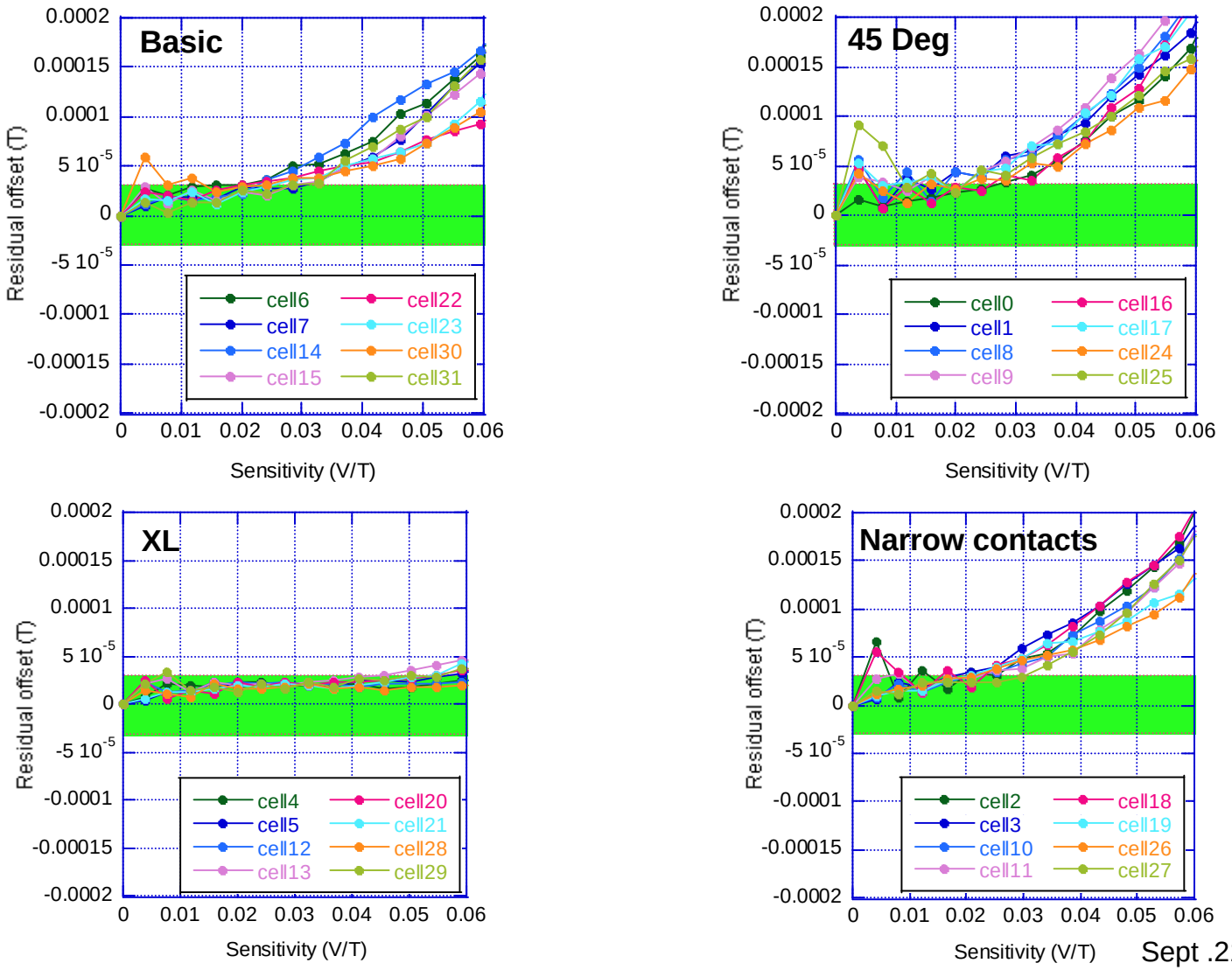

The 3D Simulation of Hall Sensors

- **All structures follow the same fabrication process.**

- ***active n-well region:*** **Arsenic doping**
  - ✓ **Gaussian profile implantation**
  - ✓ **$8.16*10^{+16}$ cm^{-3}**

- ***electrical contacts***

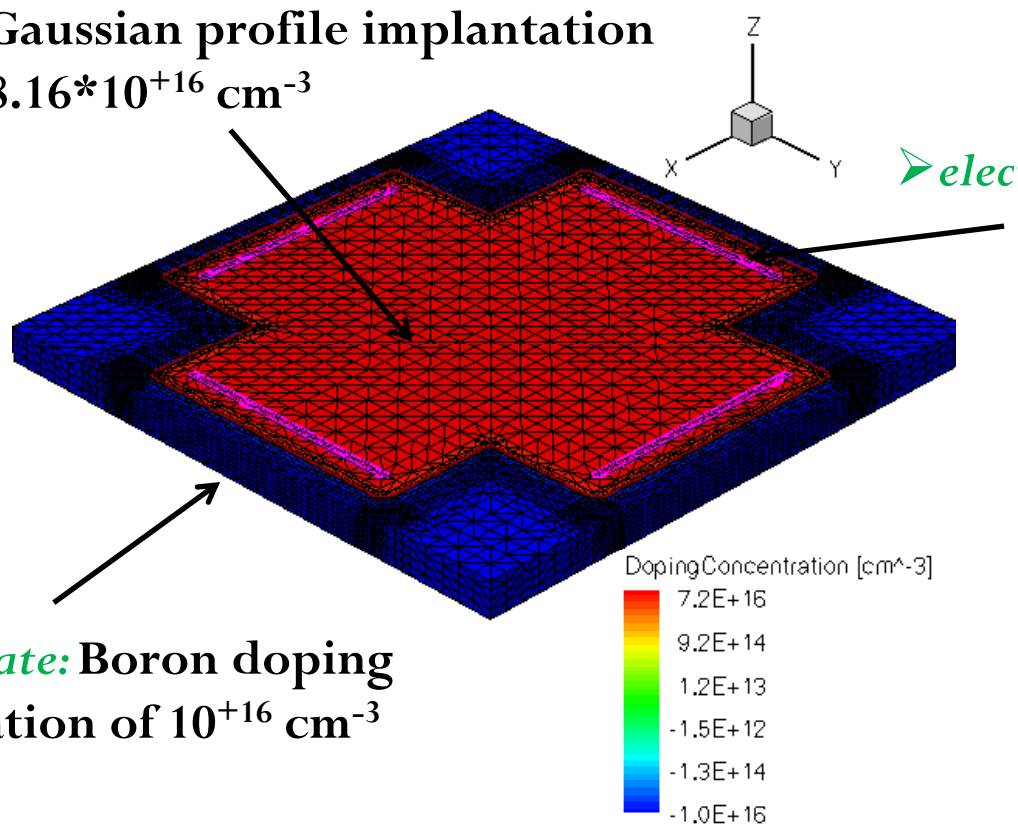

- ***p-substrate:*** **Boron doping concentration of 10^{+16} cm^{-3}**

The 3D model of XL Hall cell

CONCLUSIONS

- Different Hall effect sensors were integrated in a CMOS technology and their performance evaluated.
- The measurements results corresponding to the sensitivity, residual offset and its behavior with the temperature were presented, with a comparative analysis on different Hall cell types.
- To model the Hall Effect sensors behavior and predict their performance, 3D physical simulations were performed.

References

[1] **M.A. Paun**, J.M. Sallese, and M. Kayal, "*Geometrical parameters influence on the Hall effect sensors offset and drift*", Ph.D. Research in Microelectronics and Electronics (PRIME), 2011 7th Conference on 2011, p. 145 – 148

[2] **M.A. Paun**, J.M. Sallese, and M. Kayal, "*A Specific Parameters Analysis of CMOS Hall Effect Sensors with Various Geometries* ", Mixed Design of Integrated Circuits and Systems (MIXDES), 2012 Proceedings of the 19th International Conference, 2012, p. 335-339, **Outstanding Paper Award**

[3] **M.A. Paun**, J.M. Sallese, and M. Kayal,, "*Hall effect sensors performance investigation using three-dimensional simulations*", Mixed Design of Integrated Circuits and Systems (MIXDES), 2011 Proceedings of the 18th International Conference, 2011, p. 450 – 455, **IEEE ED Chapter Special Award**

[4] **M.A. Paun**, J.M. Sallese, and M. Kayal, "*Geometry influence on Hall effect devices performance*", U.P.B. Sci. Bull., Series A, Vol. 72, Iss. 4, 2010, p. 257 - 271